| | |
|---|---|
| | Date: |
| | Client: |
| | Project: |

BELGAQUA

REACH COMPLIANCE

RoHS

SINTEF

WRAS APPROVED PRODUCT

**5471R-081ST**

¾" thermostatic mixer.
5471R-081STUP = Thermostatic mixer 5400NV, 200M.
5471R-081STAP = Handle NR51, handle NR52, handle NR64G, hand shower and hand shower holder with non-return valve 070R, with holder to the right, hose 1500 mm, head shower 080ST, 60 mm circular flanges: 001, 3 pcs. 2001.

**Flow**

| | **Bar:** | **1.0** | **2.0** | **3.0** | **4.0** | **5.0** |
|---|---|---|---|---|---|---|
| 070R [1)] | (l/min) | 5.2 | 7.3 | 9.0 | 9.0 | 9.0 |
| 080ST [2)] | (l/min) | 14.4 | 20.4 | 25.0 | 28.9 | 32.3 |

[1)] USA: Flow restricted to 1.8 gpm (7.0 l/min)
[2)] USA: Flow restricted to 1.8 gpm (7.0 l/min)

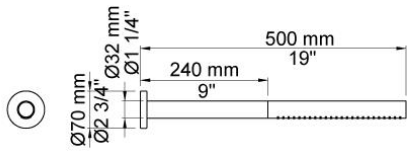


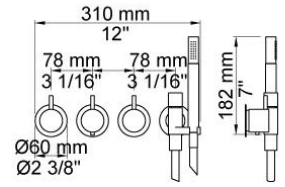


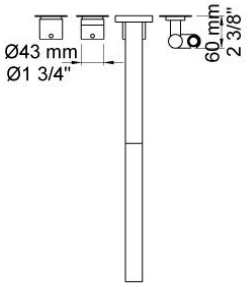


**Available in colors**

| | |
|---|---|
| Color 02, Grey | Color 21, Carmine red |
| Color 04, Light blue | Color 25, Pink |
| Color 05, Orange | Color 27, Matt black |
| Color 06, Light green | Color 28, Matt white |
| Color 08, Yellow | Color 40, Brushed stainless steel |
| Color 09, Dark grey | Color 60, Black |
| Color 12, Mocca | Color 61, Brushed black |
| Color 14, Bright red | Color 62, Deep black |
| Color 15, Dark blue | Color 63, Copper |
| Color 16, Polished chrome | Color 64, Brushed Copper |
| Color 17, Gloss black | Color 65, Gold |
| Color 18, White | Color 68, Silver |
| Color 19, Natural brass | Color 70, Brushed Gold |
| Color 20, Brushed chrome | |

**001**
60 mm circular flange.
Hole Ø30 mm.

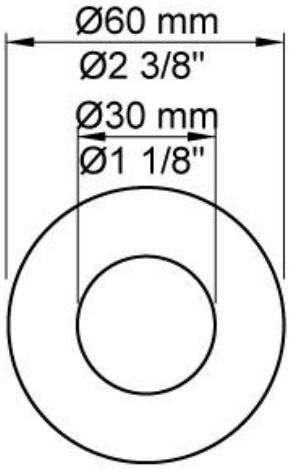

**070R**
Hand shower, hand shower with holder to the right and hose with non-return valve.

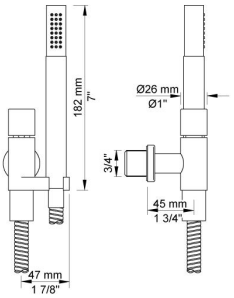

**080ST**
Head shower, 500 mm.

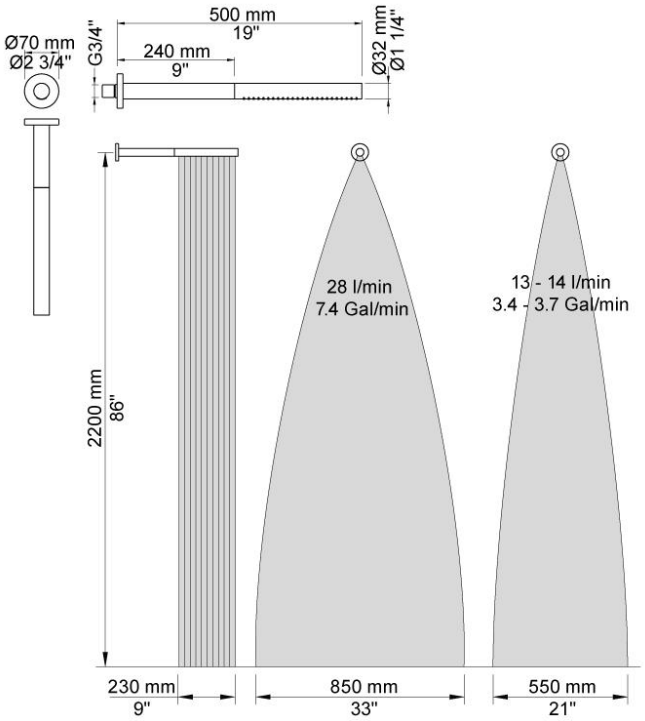

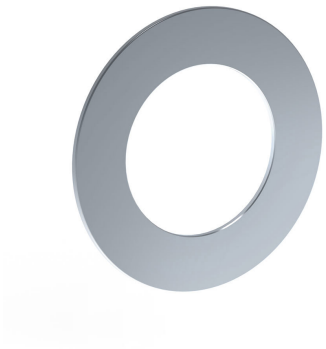

**2001**
60 mm circular flange.
Hole Ø39 mm.

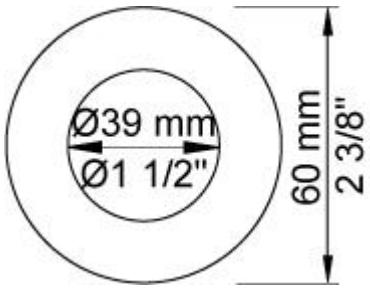


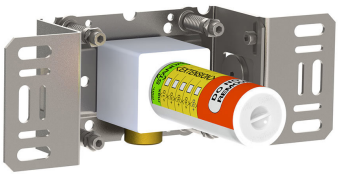

**200M**
Separate outlet socket.
½" connection to copper, steel, iron or pex pipe work.

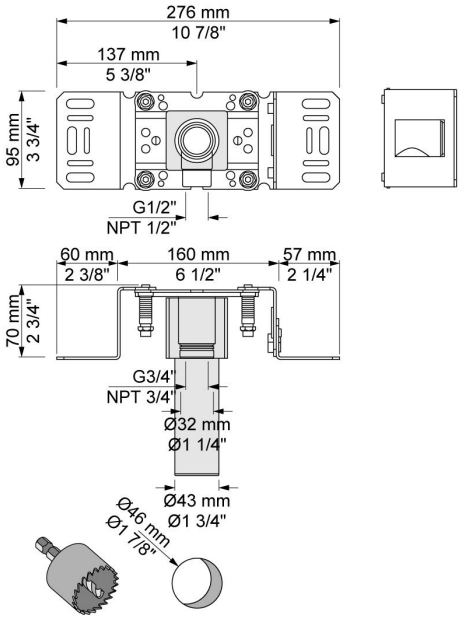


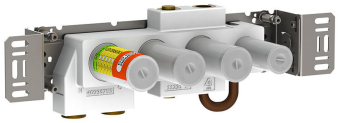

**5400NV**
Thermostatic mixer with diverter and one fixed outlet socket.
¾" connection to copper, steel, iron or pex pipe work.

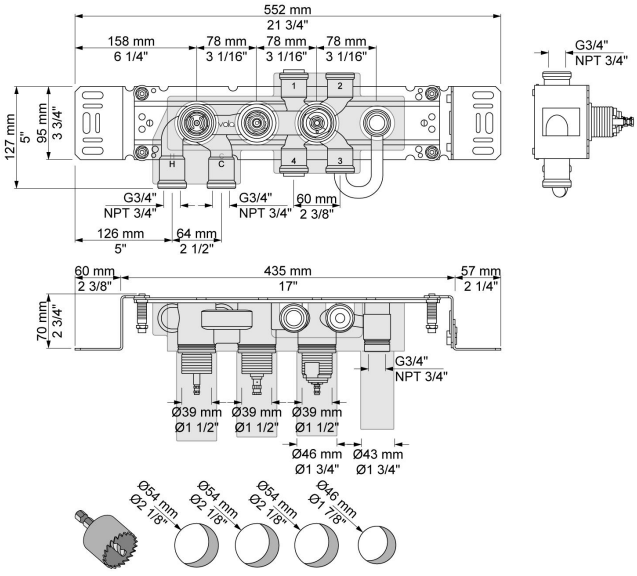

**NR51**
On/off handle for series 5000.

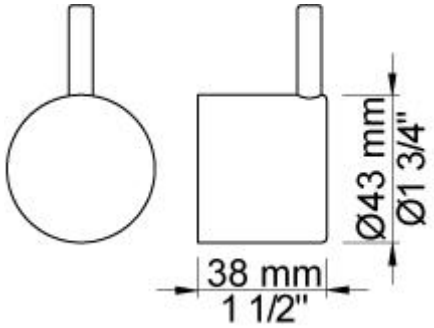

**NR52**
Thermostatic handle for series 5000.

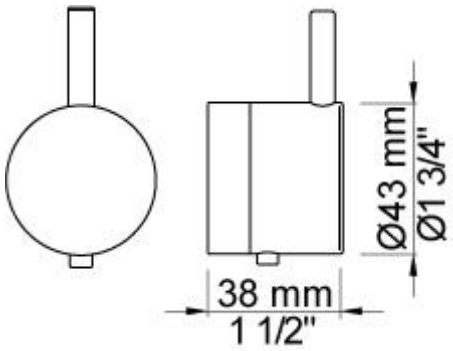
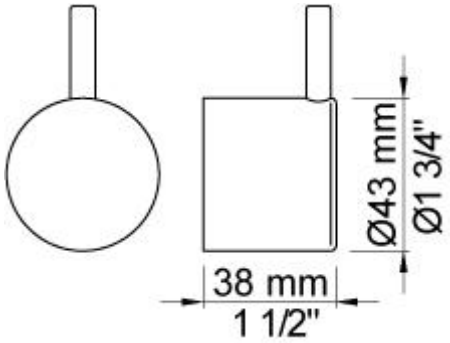
**NR64G**
Diverter handle for 5400/5600.
With peg in the same colour as handle (Standard).