VOLA RB1, RB3, RB4
VOLA SH1

Fitting instruction
Montageanleitung
Monteringsvejledning
Monteringsvägledning
Montage hanleiding
Manuel de montage

RB1, RB3, RB4:

GODKENDT TIL DRIKKEVAND

04/00187
04/00303

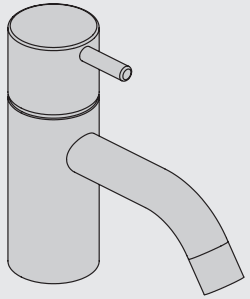

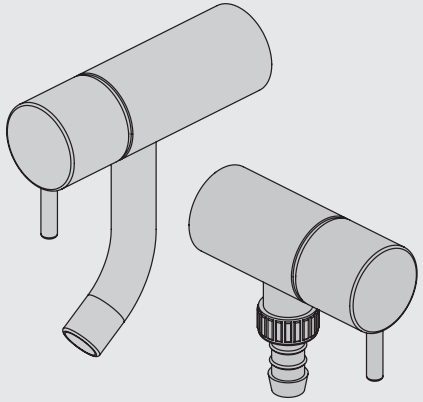

www.vola.com

vola

RB1- RB3 - RB4 -SH1
V5_40999835 - 27-11-2023

5 703182 372600

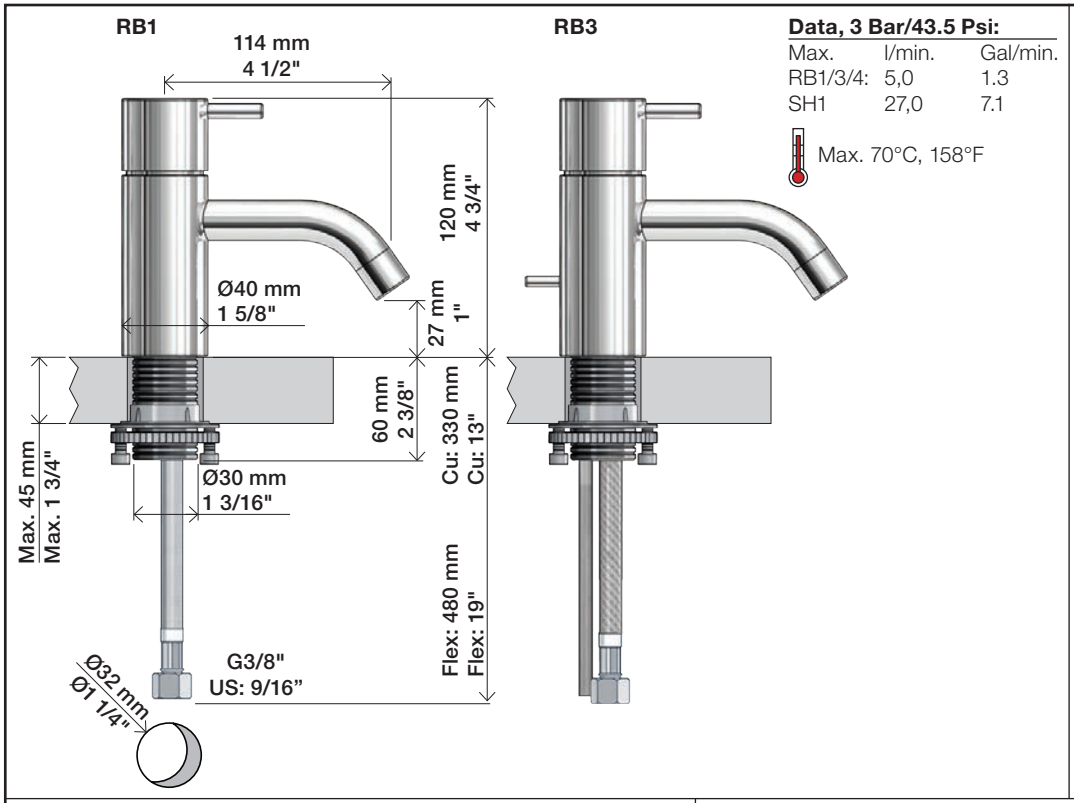

Data, 3 Bar/43.5 Psi:

Max.	l/min.	Gal/min.
RB1/3/4:	5,0	1.3
SH1	27,0	7.1

Max. 70°C, 158°F

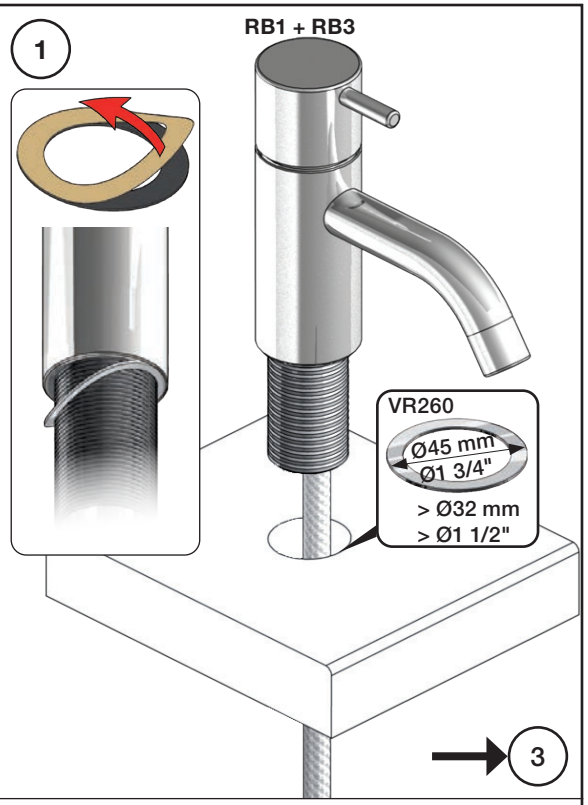

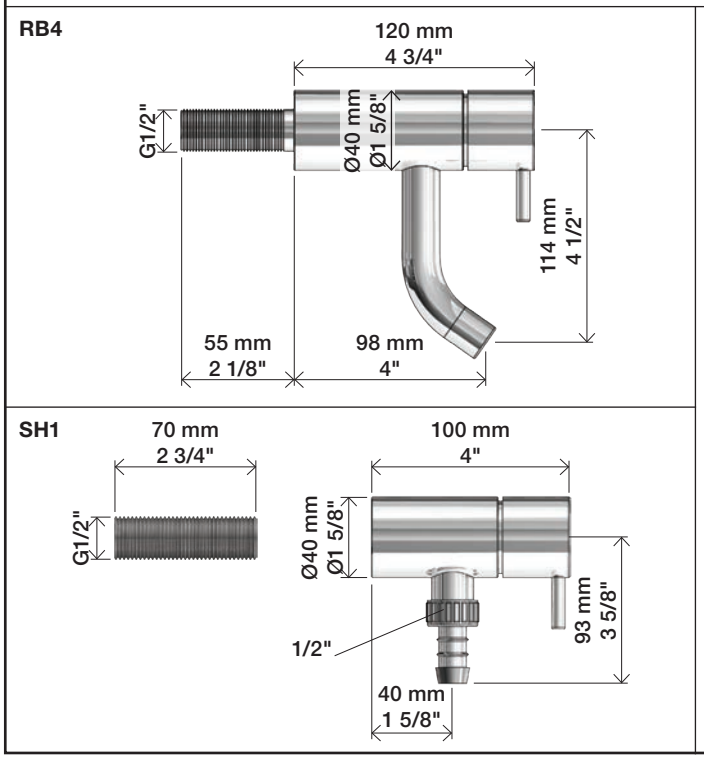

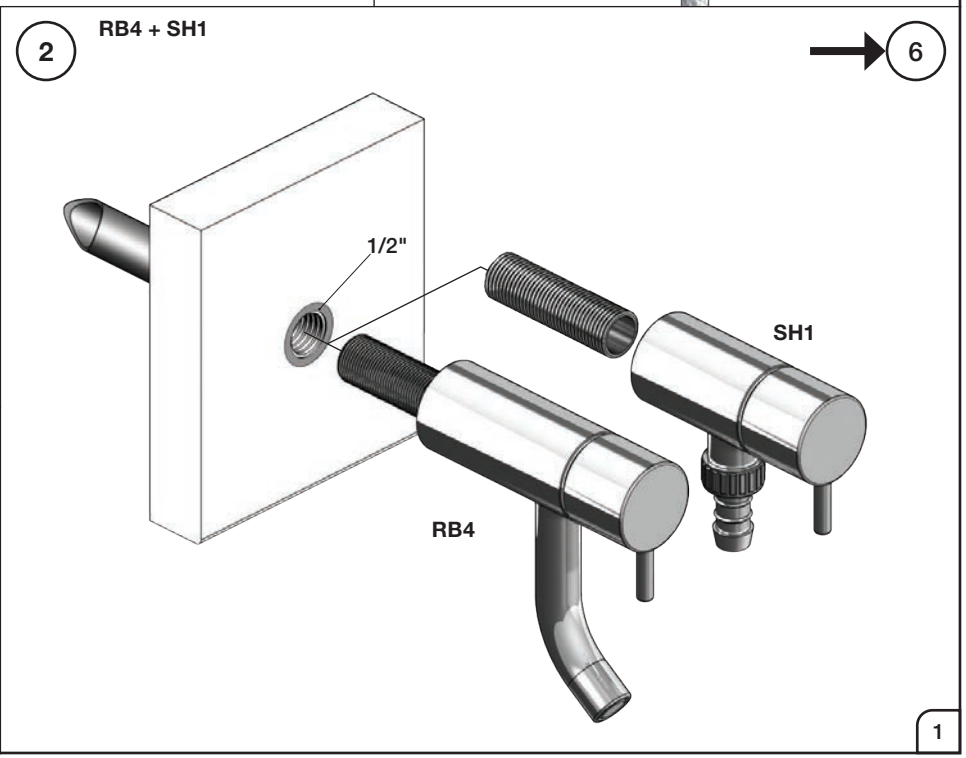

3

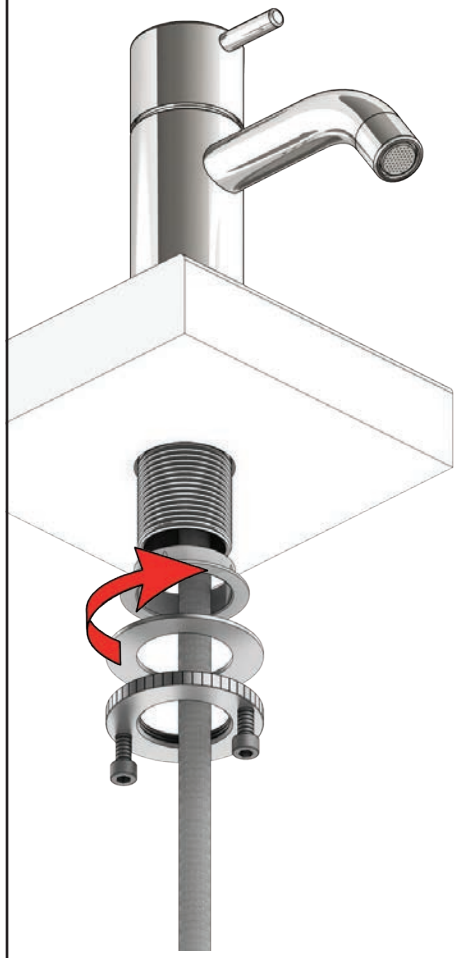

4

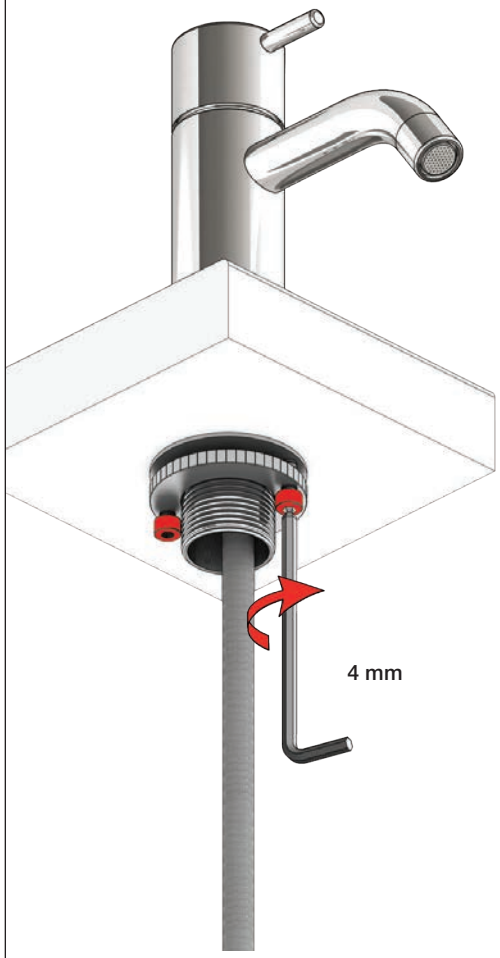

5

6

RB1, RB3

RB4

SH1

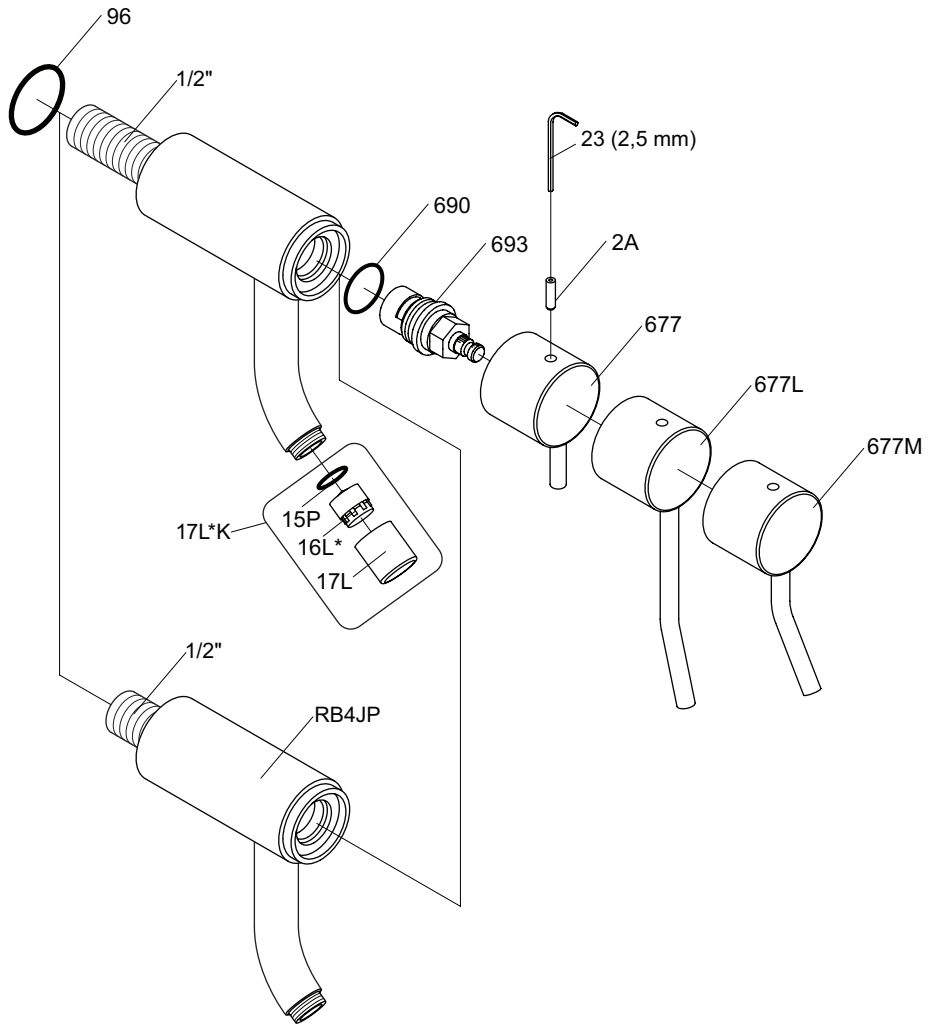

NR.7/L/M:	VR2A, VR677/L/M
*VR17L4K:	VR15P, VR16L4, VR17L (US Standard)
*VR17L5K:	VR15P, VR16L5, VR17L
*VR17L9K:	VR15P, VR16L9, VR17L
*VR17LSK:	VR15P, VR16LS, VR17L
VR693K:	VR23, VR693

vola
Lunavej 2
DK-8700 Horsens
Tlf : + 45 7023 5500
sales@vola.com
www.vola.com

VOLA RB4

Date
Okt. 16

Rev.
4

Sheet
SB 29.2