VOLA A82, A83
VOLA VR1894

Fitting instruction
Montageanleitung
Monteringsvejledning
Monteringsvägledning
Montagehanleiding
Manuel de montage

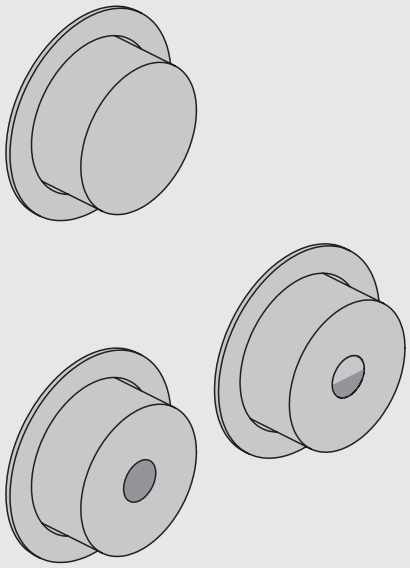

www.vola.com

vola

mnt_A82-A83_V2_40998363
09-03-2023

5 705230 355672

Recommended Cistern
Empfohlende Spülkasten
Anbefalet cisterne
Rekommenderad cisterne
Aanbevolen reservoir
Citerne recommandée

GEBERIT:
- OMEGA
- Kappa

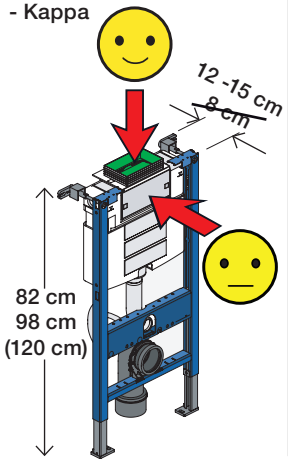

Placement
Platzierung
Placering

Placering
Plaatsing
Placement

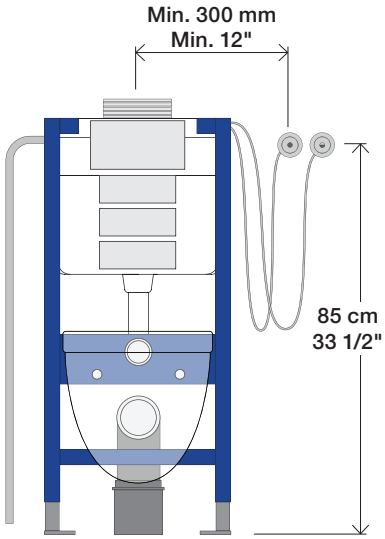

Parts included
Teile mitgeliefert

Medfølgende dele
Delar som ingår

Delen inklusief
Pièces incluses

A82 x1
A83 x2

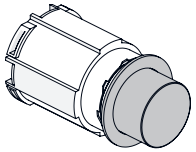

A82: x1
L = 2m

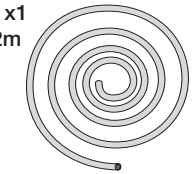

A83: x1
L = 2m

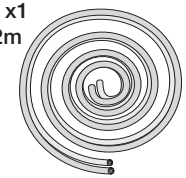

A82: x1 - VR1895

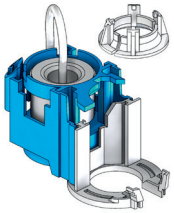

A83: x1 - VR1896

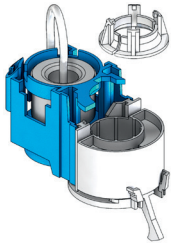

+

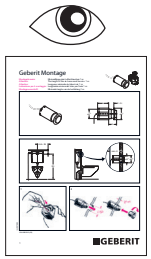

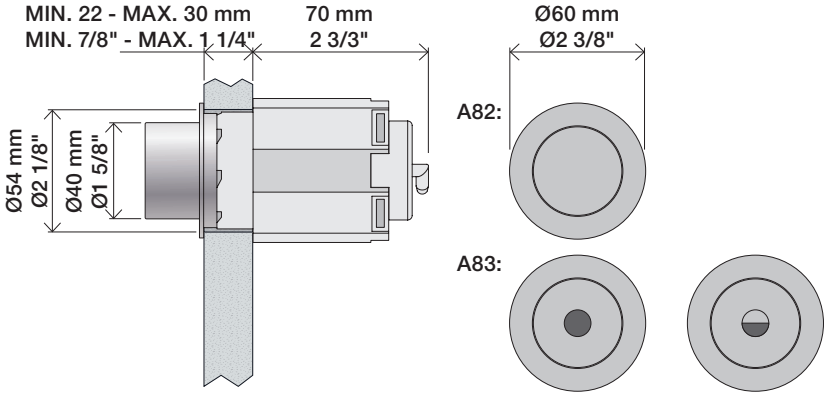

1

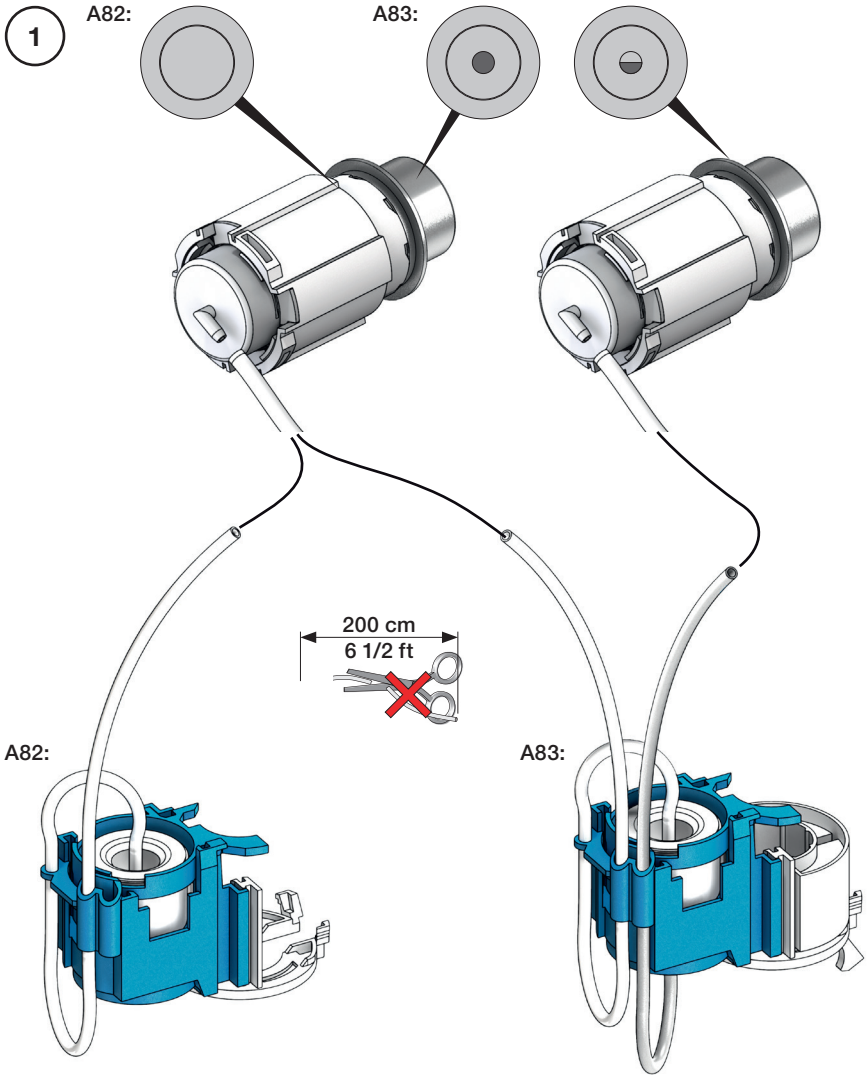

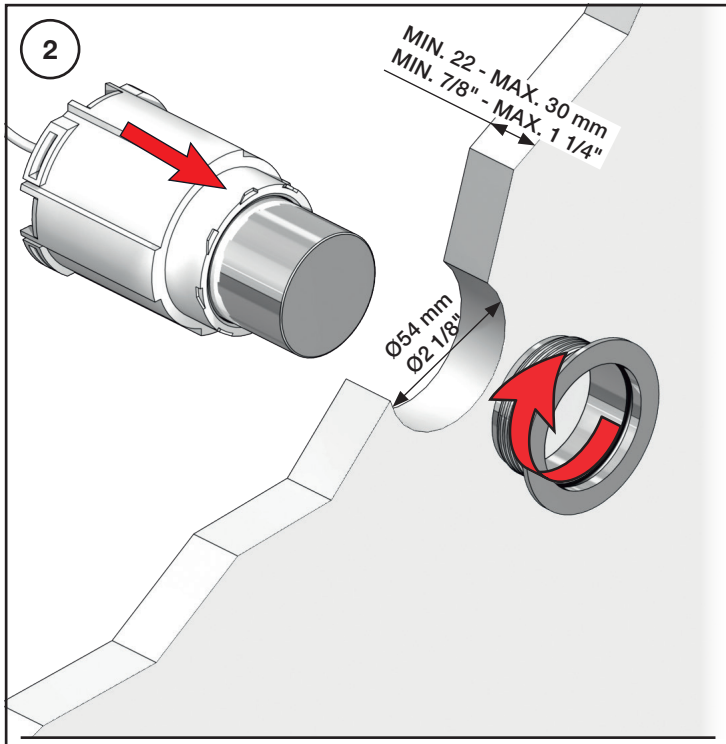

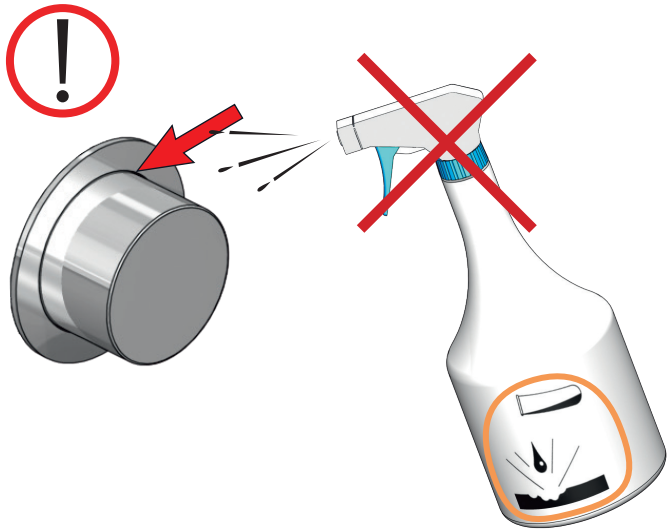

VR1894:
A82 & A83 Pre 04-2021

Adapter hose
Adapterschlauch
Adapterslange
Adapterslang
Waterslang
Tuyau adaptateur

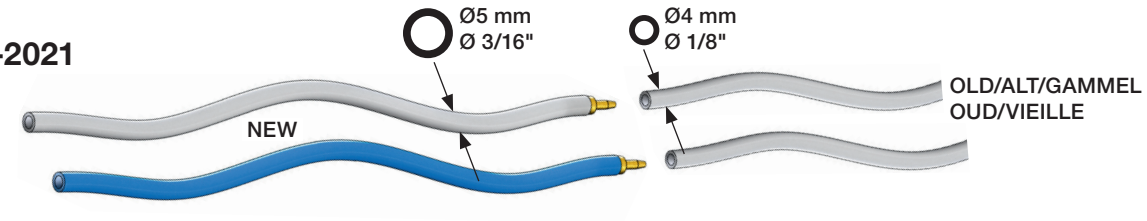

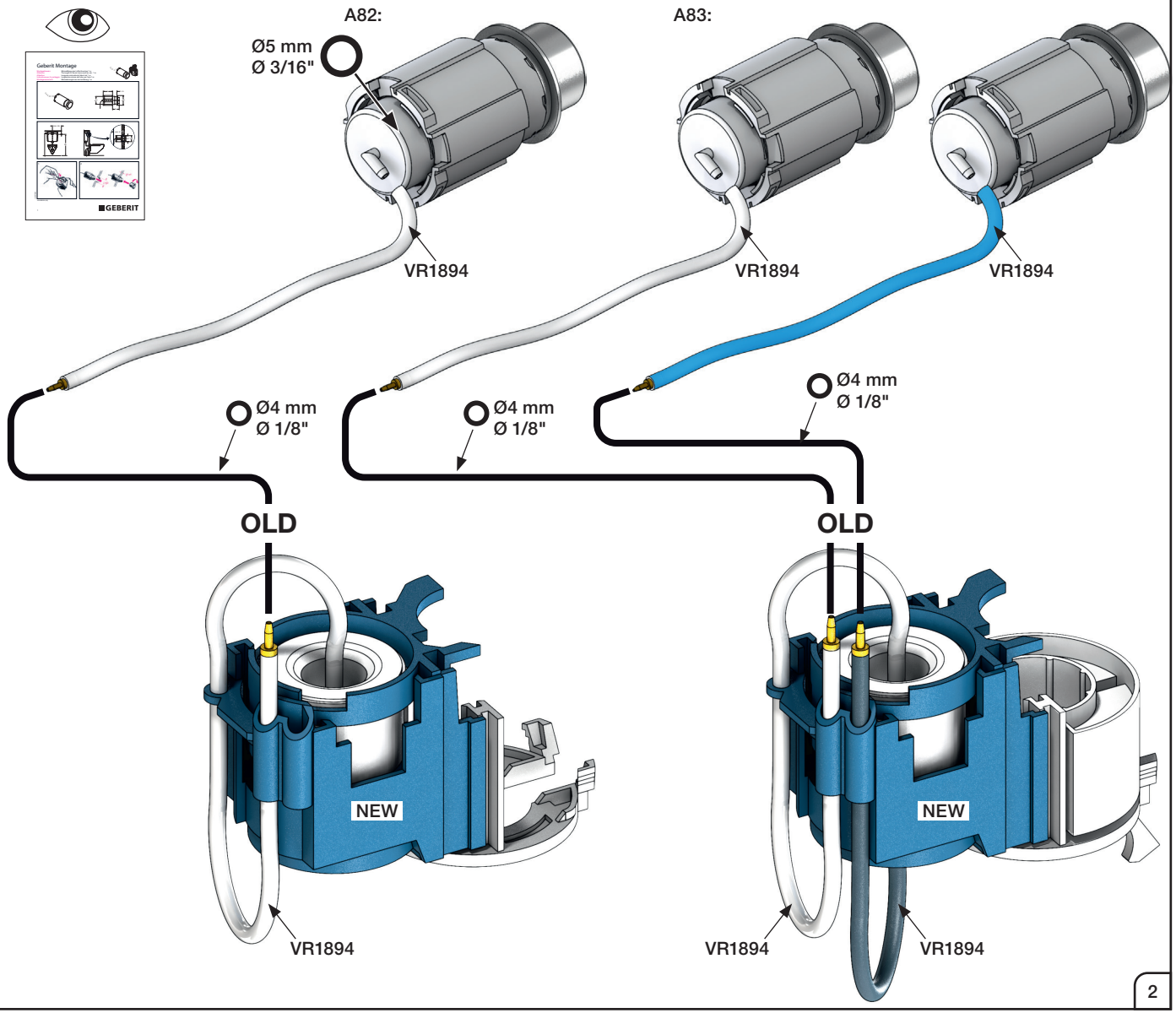

VOLA A/S • Lunavej 2 • DK-8700 Horsens • Tel. +45 7023 5500 • sales@vola.dk • www.vola.com

A82:

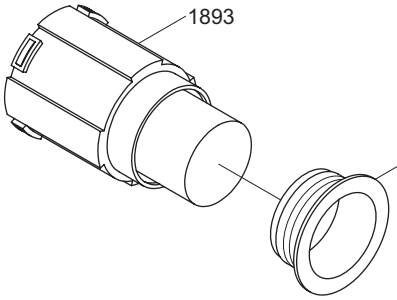

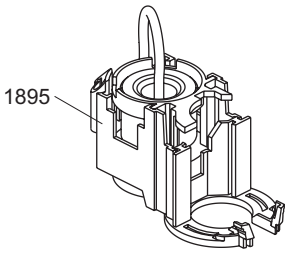

A83:

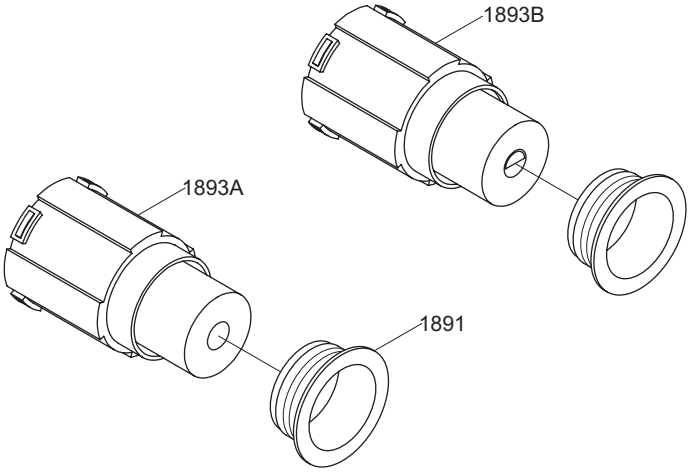

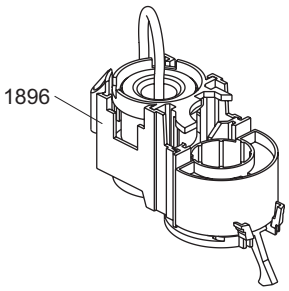

Adapter - VR1894, A82/A83 pre 04-2021

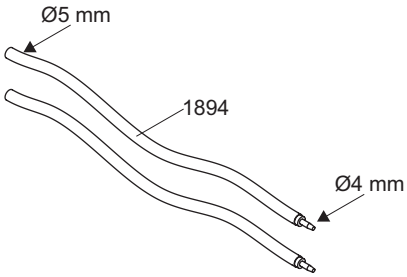

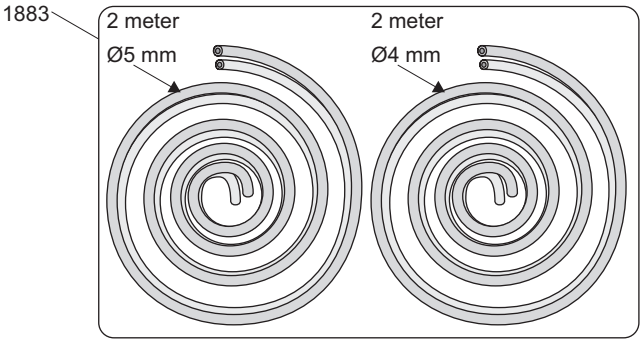

vola
Lunavej 2
DK-8700 Horsens
Tlf : + 45 7023 5500
sales@vola.com
www.vola.com

VOLA A82/A83

Date	Apr. 21
Rev.	1
Sheet	SB 99.3