Date:

Client:

Project:

REACH COMPLIANCE

RoHS

WRAS APPROVED PRODUCT

2281D

One-handle build-in mixer with ceramic disc technology. 2281DUP = Mixer 2200. 2281DAP = Handle NR21, double head shower 080D, 60 mm circular flange 2001.

Flow

	Bar:	**1.0**	**2.0**	**3.0**	**4.0**	**5.0**
2281D [1)]	(l/min)	11.6	16.3	20.0	23.1	25.8

[1)] USA: Flow restricted to 1.8 gpm (7.0 l/min)

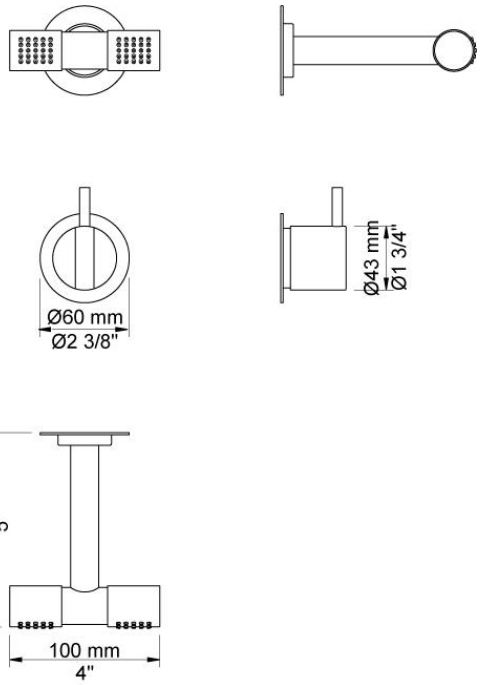

Available in colors

	Color 20, Brushed chrome
Color 02, Grey	Color 21, Carmine red
Color 04, Light blue	Color 25, Pink
Color 05, Orange	Color 27, Matt black
Color 06, Light green	Color 28, Matt white
Color 08, Yellow	Color 40, Brushed stainless steel
Color 09, Dark grey	Color 60, Black
Color 12, Mocca	Color 61, Brushed black
Color 14, Bright red	Color 63, Copper
Color 15, Dark blue	Color 64, Brushed Copper
Color 16, Polished chrome	Color 65, Gold
Color 17, Gloss black	Color 68, Silver
Color 18, White	Color 70, Brushed Gold
Color 19, Natural brass	

001
60 mm circular flange. Hole Ø30 mm.

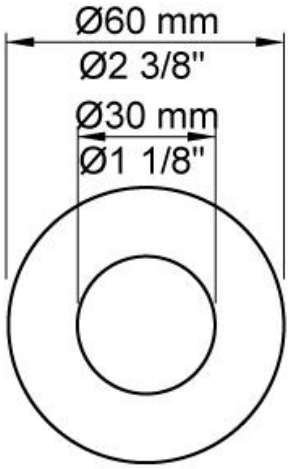

080D
130 mm double head shower. 60 mm cover flange included.

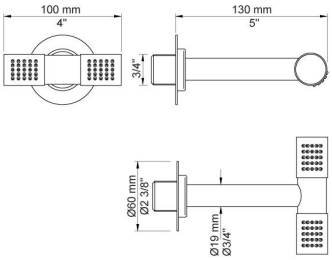

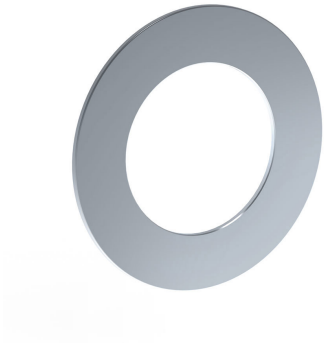

2001
60 mm circular flange. Hole Ø39 mm.

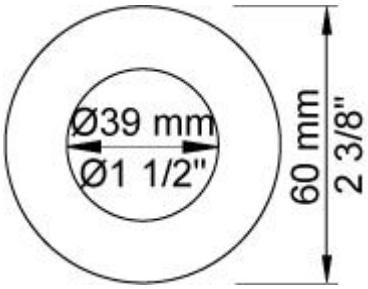

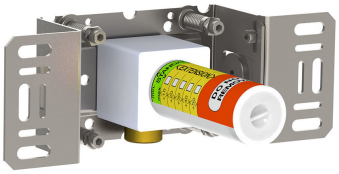

200M
Separate outlet socket.
½" connection to copper, steel, iron or pex pipe work.

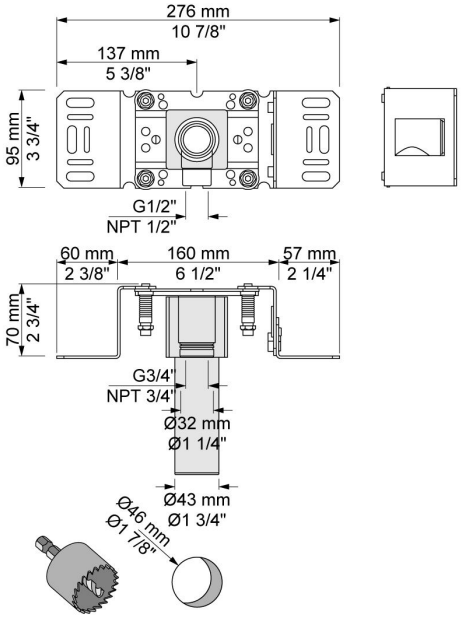

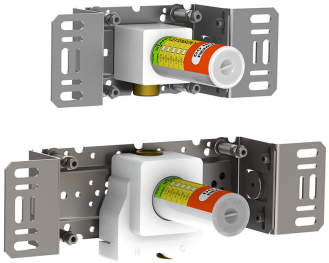

2200
One-handle build-in mixer for high flow, including separate outlet socket, 200M. ½" connection to copper, steel, iron or pex pipe Work.

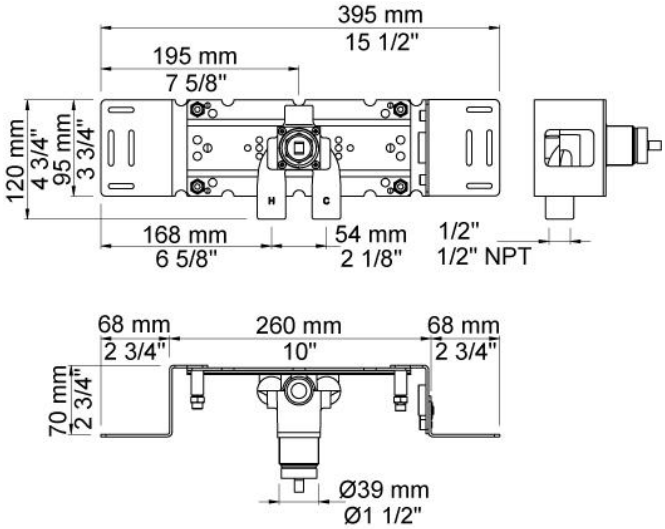
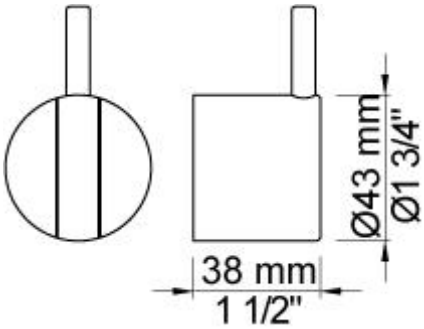
NR21
Operating handle for 2100, 2200, 2300, 2400 incl. variants. Ø43 mm.